REV.	ZONE	DESCRIPTION	CS/REL NO.	DATE	DESIGNED	CHECKED
13		Change Report D00431831 Rev.13		2024/01/26	Thoelen	Placzko

Darstellung groeßter Querschnitt 4-6mm²
Shown largest cross-section 4-6mm²

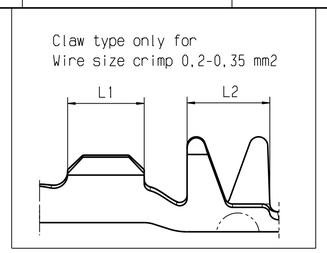

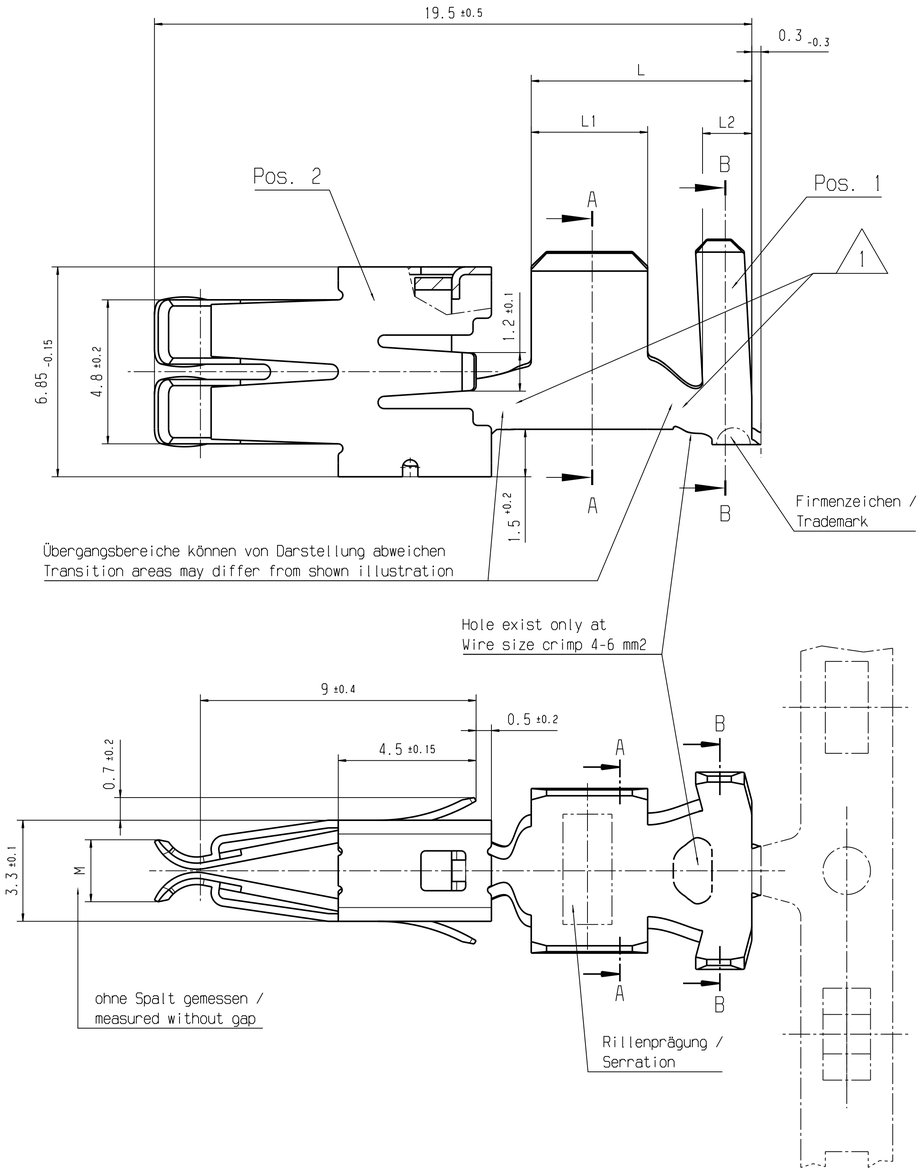

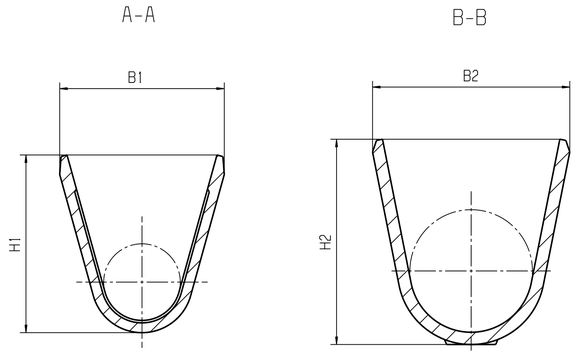

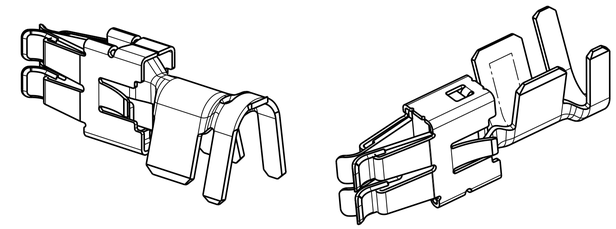

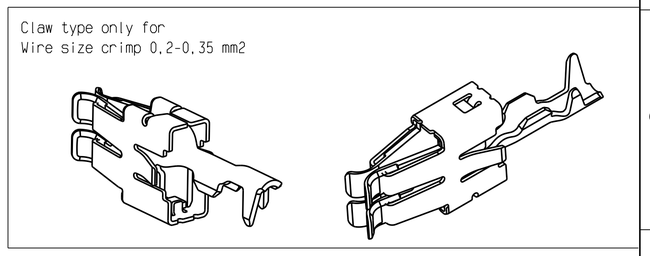

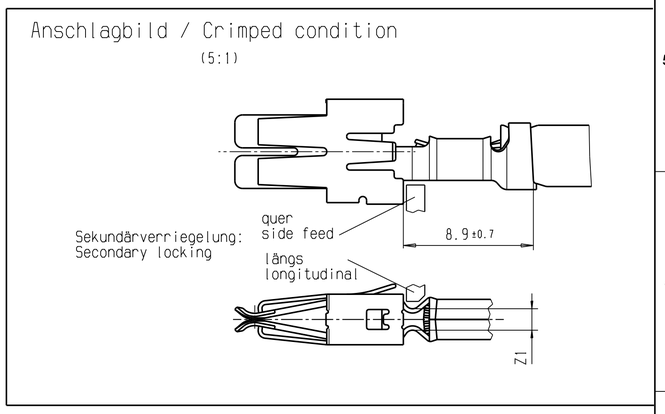

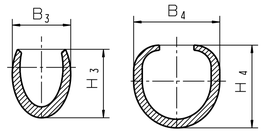

3202596U1	48095 330 186	320257AZ9	28095 330 186	5,2	4,15	5,75	5,45
32025Y1Z2	46650 330 186	320257BP2	26650 330 186	4	3,7	5,8	5,4
3202596P4	46648 330 186	3202537M3	26648 330 186	3,3	3,15	4,1	4,3
3202596Q2	46649 330 186	3202537J9	26649 330 186	2,6	2,25	3,35	3,35
SEM Part Number	CS Part Number	SEM Part Number	CS Part Number	H_3 +/-0,3	B_3 +/-0,3	H_4 +/-0,3	B_4 +/-0,3
Pre-rolled Single Parts		made of		Crimp Dimensions			

Pre-rolled single Parts for Hand Tool

Wire Size Range [mm²]	SEM Part Number	CS Part Number	Material	Surface	thick-ness (t)	Material	Surface	thick-ness (t)	H1 +/-0,3	B1 +/-0,3	H2 +/-0,3	B2 +/-0,3	L1 +/-0,2	L2 +/-0,2	L +/-0,5	M	Z1 max.	Remark
4-6	320257AZ9	28095 330 186	CuFe2P	FrSn1+1	0,4	FeCrNi	without surface	0,25	5,8	5,4	6,7	6,4	3,8	1,6	7,2	2.3±0.15	2,5	---
2,5-4	320257BP2	26650 330 186							4,8	4,6			4,0		6,8		1,6	
1,5-2,5	E00021360	26646 330 141		AG1 (connection area)					4	3,8	4,9	4,7	3,5		6,3	2,45±0.15		reduced insertion force
	3202537M3	26648 330 186														2.3±0.15		
0,5-1	3202537J9	26649 330 186		FrSn1+1					3	2,8	4,1	3,8	3		5,8			---
0,2-0,35	320257AU0	26697 330 186							2,2	2,2	3,1	3,1	2,5	2,8	6,6			
Assembly Part Number			Pos.1: Basic Part			Pos.2: Spring			Crimp Dimensions									

Bemerkungen / Comments

1 Nur für Crimpgrösse 4-6 mm2
für Übergangsbereiche verminderte Qualität zulässig
Sekundärverriegelung nur quer möglich

Only for wire size crimp 4-6 mm2
for transition areas reduced quality permitted
secondary locking only side feed possible

ZULAESSIGE LAGERBEDINGUNGEN FUER LEAR CS-PRODUKTE GEMAESS V/8023/06/R
PERMISSIBLE STORAGE CONDITIONS FOR LEAR CS-PRODUCTS IN ACCORDANCE TO...

GENERAL TOLERANCES: ~~DIN 16901 -~~ ISO 2768 - mK

THE ENGLISH TRANSLATION IS BELIEVED TO BE ACCURATE. IN CASE OF DISCREPANCIES THE GERMAN VERSION SHALL GOVERN.

CS Drawing Number: 20286

ANGLE PROJECTION: EU

MATERIAL: see table
FINISH / SURFACE: see table
COLOR: ---

WEIGHT CAD: --- [g]
VOLUME CAD: --- [mm³]

SCALE: 10:1
START DATE: 1995/09/07
DRAWN: Bal
APPROVERS: Sven Vesper

LEAR CORPORATION

Lear Corporation GmbH
Schlosserstraße 4
42899 Remscheid
Germany

TITLE
miscellaneous / cross carline
AFK4.8 x 0.8

DRW FILE NAME: 20286-_____CG-__00113
CAD DIRECTORY / CAD LOCATION: K-AUTOMOT/LAGER-20
MODEL FILE NAME: ---

LAST UPDATE	SEM DOCUMENT ID / DRAWING NUMBER	REV.	SHEET	OF	TYPE
2024/01/26	D00431831 –	13	1	1	CG

CONFIDENTIAL - THIS DRAWING AND ALL INFORMATION DISCLOSED HEREIN ARE OWNED BY LEAR CORPORATION AND ARE NOT TO BE DISTRIBUTED OR DISSEMINATED IN ANY MANNER UNLESS EXPRESSLY AUTHORIZED IN WRITING BY LEAR CORPORATION.

Official current version only in LEAR DB.
In printed form no update information service.

Offizielle aktuelle Ausgabe nur in LEAR DB.
In gedruckter Form kein Änderungsdienst.
Catia V5 DIN A1