SYMBOL DEFINITION			MISSING SYMBOLS
A DIMENSION WITHOUT AN INSPECTION REPORT SYMBOL (▭) DOES NOT REQUIRE INSPECTION. IT MAY BE CONTROLLED ON THE INDIVIDUAL COMPONENT DRAWING.	TOTAL NO OF INSPECTIONS REQUIRED	13	NO MISSING SYMBOL NUMBER
	LAST NO. USED	12	

DWG STATUS DATE	STS	REV	N/P	CHG	ZONE	REVISION HISTORY	AUTH	DR	APVD	APVD 2
18APR2	R	01	-	-		12124686 - WAS ON TAXI 12124688, SHT 1; 15358681 - WAS SPRAYER DWG; ALL PARTS - ADDED NOTES 12 PLUS; & REVISED TO. SIMS 12 PLUS; 12124686 - REVISED MAT'L SPEC	217544	BYP	RVP	JH
04DE03	R	02	-	-		ALL PARTS - ADDED BLENDS TO CLIP SLOT; 15358681 MATERIAL SPEC WAS PA0023U2-G02	249737	RH	RH	BG
26JA04	R	03	-	-		12124686: REVISED DRAWING TO MATCH PART	258405	JMP	JMP	BG
16AU04	R	04	-	-		ALL PARTS - UPDATED PDM ATTRIBUTES	283602	ABG	CJP	BG
14DE07	R	05	-	-		ALL PARTS - ADDED APPLICATION DATA NOTE, APPEARANCE ITEM NOTE & RECYCLING CODE REQUIREMENT; REMOVED PART ACCESS NOTE; ADD REVISED MAT'L CALLOUT TO GENERIC CALLOUT	403154	JTZ	EVV	JGS

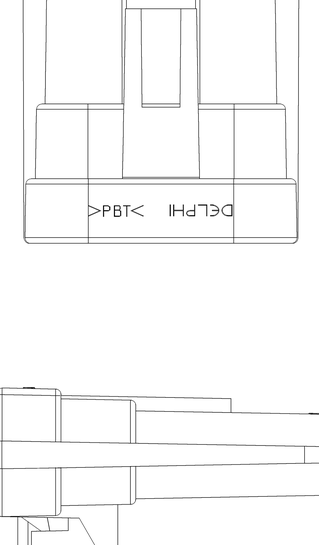

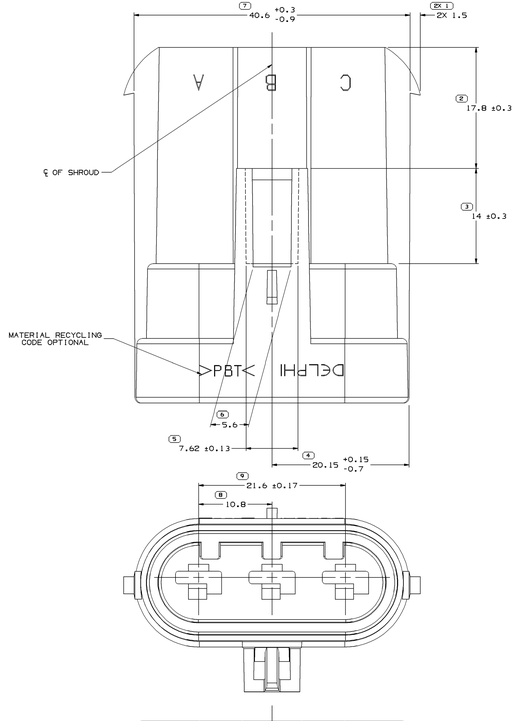

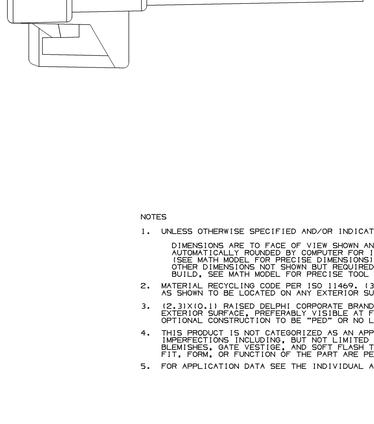

TYPE 102
SAME AS TYPE 101
EXCEPT AS SHOWN

NOTES

1. UNLESS OTHERWISE SPECIFIED AND/OR INDICATED:

   DIMENSIONS ARE TO FACE OF VIEW SHOWN AND AUTOMATICALLY ROUNDED BY COMPUTER FOR INSPECTION (SEE MATH MODEL FOR PRECISE DIMENSIONS). FOR ALL OTHER DIMENSIONS NOT SHOWN BUT REQUIRED FOR TOOL BUILD, SEE MATH MODEL FOR PRECISE TOOL PATH DATA.

2. MATERIAL RECYCLING CODE PER ISO 11469. 13.21X10.11 CHARACTERS AS SHOWN TO BE LOCATED ON ANY EXTERIOR SURFACE.

3. (2.31X10.11 RAISED DELPHI CORPORATE BRAND TO BE LOCATED ON ANY EXTERIOR SURFACE, PREFERABLY VISIBLE AT FINAL ASSEMBLY. OPTIONAL CONSTRUCTION TO BE "PED" OR NO LOGO.

4. THIS PRODUCT IS NOT CATEGORIZED AS AN APPEARANCE ITEM. MINOR IMPERFECTIONS INCLUDING, BUT NOT LIMITED TO, FLOW MARKS, COLOR BLEMISHES, GATE VESTIGE, AND SOFT FLASH THAT DO NOT AFFECT THE FIT, FORM, OR FUNCTION OF THE PART ARE PERMISSIBLE PER NAP 4.10-18.

5. FOR APPLICATION DATA SEE THE INDIVIDUAL APPLICATION DRAWINGS.

PART NO	REV	N/P	STATUS	TYPE	MATERIAL SPECIFICATION AND COLOR	VOLUME CM³
15358681	02	AB		101	POLYESTER COMPOUND BLACK	11.991
12124686	03	AC		102	POLYESTER COMPOUND BLACK	11.984

7 PROCESS SENSITIVE DIMENSION

DIMENSION ENCLOSED IN () INDICATE REFERENCE DIMENSION, NO 4G TOLERANCE LIMITS ARE ESTABLISHED

| DIMENSIONAL RANGE (MM) | | |