THIS DRAWING IS UNPUBLISHED. RELEASED FOR PUBLICATION 2003
© COPYRIGHT 2003 BY TYCO ELECTRONICS CORPORATION. ALL RIGHTS RESERVED.

LOC	DIST
AP	-

DO NOT REVISE EXCEPT BY CAD

REVISIONS

P	LTR	DESCRIPTION	DATE	DWN	APVD
	P1	REV PER ECO-09-026444	27NOV09	KK	AEG
	P2	REV. BY ECO-10-006997	09APR10	HC	WLS
	P3	REVISED BY ECO 16-005803	28JUN2016	HC	WLS

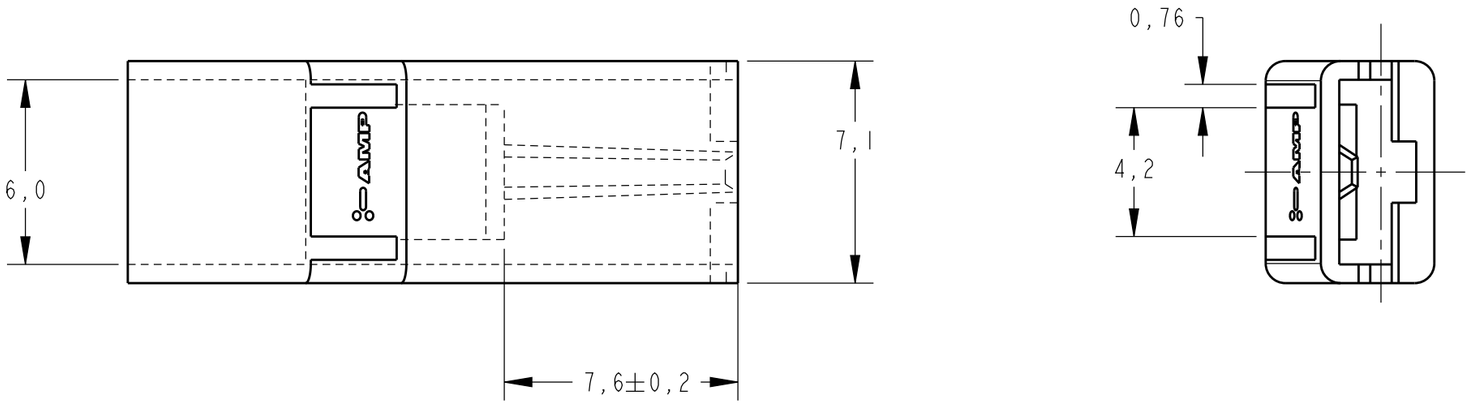

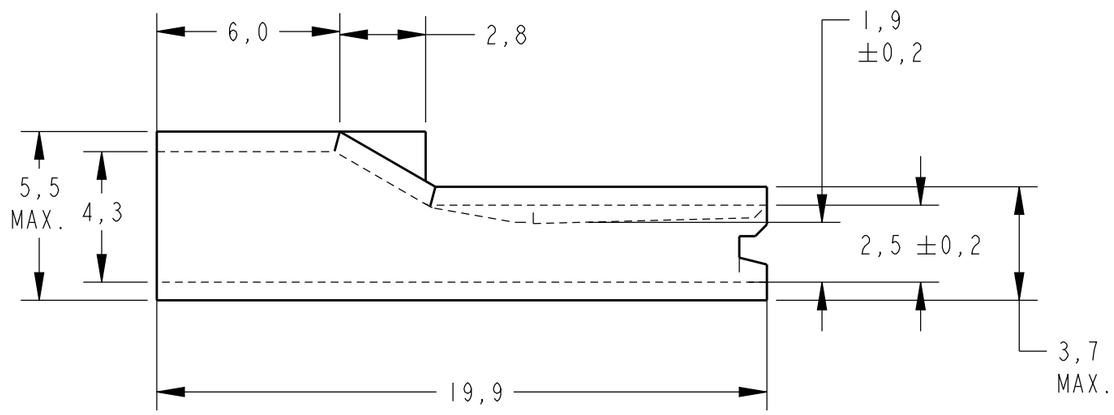

1 -MATÉRIA-PRIMA CONFORME ESPECIFICAÇÃO IEC 60335-1, GWT 750°C, SEM CHAMA.
RAW MATERIAL ACC. TO SPEC. IEC 60335-1, GWT 750°C, WITHOUT FLAME.

	FINISH	MATERIAL	PART NUMBER
	NATURAL	1	2-880488-2
	NATURAL	PA6.6V0 OR PA6.6V0+PA6V0	2-880488-1
	AMARELO/YELLOW	PA 6.6	1-880488-5
	VERMELHO/RED	PA 6.6	1-880488-4
OBSOLETE	~~AZUL/BLUE~~	~~PA 6.6~~	~~1-880488-3~~
	PRETO/BLACK	PA 6.6	1-880488-2
	NATURAL/NATURAL	PA 6.6	1-880488-1
OBSOLETE	~~VERMELHO/RED~~	~~POLIPROPILENO/POLYPROPYLENE~~	~~880488-4~~
	~~AZUL/BLUE~~	~~POLIPROPILENO/POLYPROPYLENE~~	~~880488-3~~
	NATURAL/NATURAL	POLIPROPILENO/POLYPROPYLENE	880488-2
	PRETO/BLACK	POLIPROPILENO/POLYPROPYLENE	880488-1

THIS DRAWING IS A CONTROLLED DOCUMENT FOR TYCO ELECTRONICS CORPORATION IT IS SUBJECT TO CHANGE AND THE CONTROLLING ENGINEERING ORGANIZATION SHOULD BE CONTACTED FOR THE LATEST REVISION.

DIMENSIONS: mm

TOLERANCES UNLESS OTHERWISE SPECIFIED:

0 PLC	±-
1 PLC	±0,5
2 PLC	±-
3 PLC	±-
4 PLC	±-
ANGLES	±-

MATERIAL SEE TABLE
FINISH SEE TABLE

DWN	M.R.BRIZ	05SEP2003
CHK	P.L.FARIA	05SEP2003
APVD	D.A.OLIVEIRA	05SEP2003
PRODUCT SPEC	N/A	
APPLICATION SPEC	N/A	
WEIGHT	-	

Tyco Electronics
TYCO ELECTRONICS do Brasil LTDA.
São Paulo , Brasil

NAME .187 S. FASTON RECEPTACLE HOUSING
-

SIZE	CAGE CODE	DRAWING NO	RESTRICTED TO
A3	00779	C-880488	-

CUSTOMER DRAWING | SCALE 5:1 | SHEET 1 OF 1 | REV P3

AMP 1470-19 REV 31MAR2000